G-8056H-C19E0

HARLEY Series

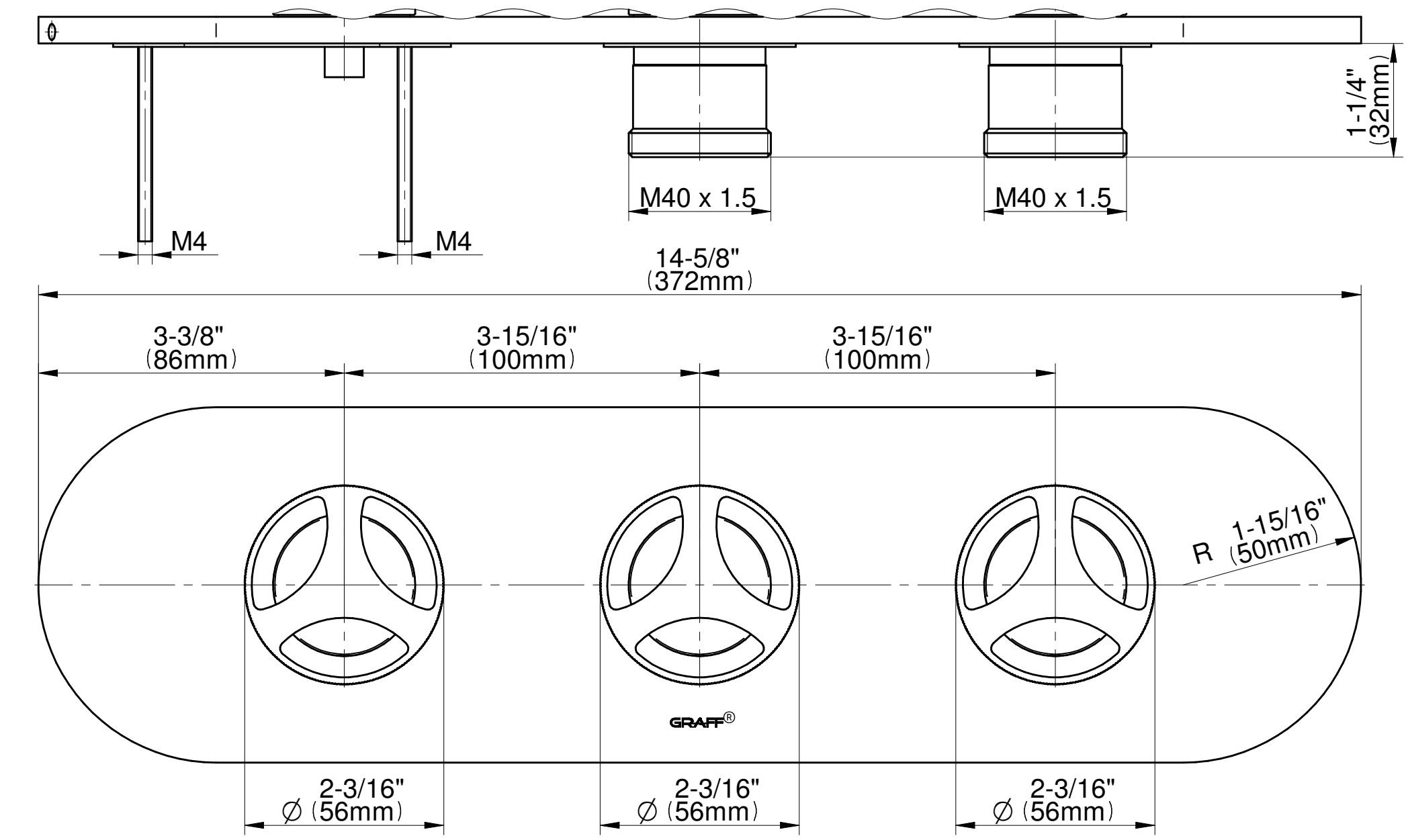

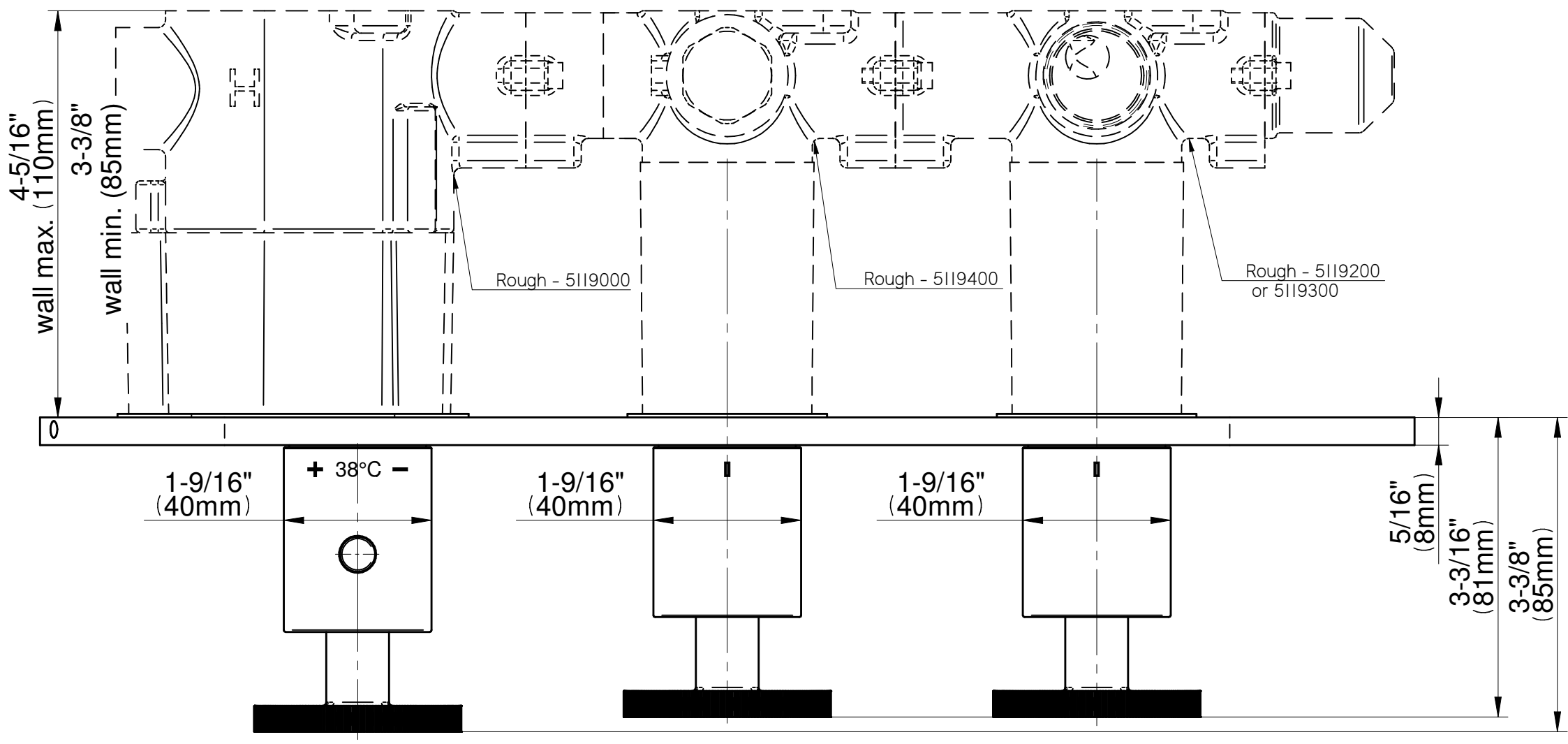

GRAFF®

CUTTING EDGE DESIGN